Multifan

VOSTERMANS VENTILATION

Multifan Mobile Fans

The Multifan Mobile Fan is available in 40 and 50 cm diameter. Because of its multifunctional design and high air capacity, it can be used in many fields; from industry to agriculture, indoor as well as outdoor. The Multifan Mobile Fan is stackable and easy to transport.

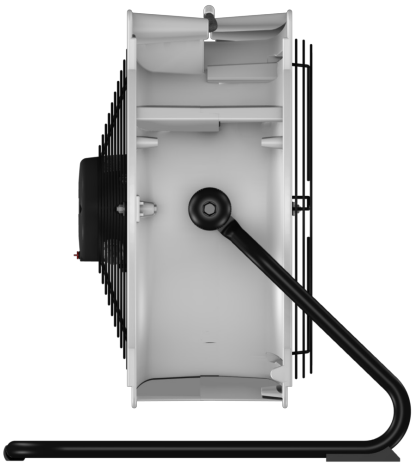

Applications of Mobile Fans:

Industry
- Discharge of heat
- Cooling for machines
- Air movement in general
- Man cooler
- Removal of dust
  (construction work, tear down of buildings)

Intensive lifestock
- Extra ventilation in extreme circumstances
- Emergency ventilation

Agricultural and horticultural
- Drying of small quantities
  of potatoes, flower bulbs a.s.o.
- Division of air in greenhouses
- Ventilation in mushroom cellars

Public buildings
- Extra ventilation during warm or moist weather

Options:
- 3 step controller
- Adapter for hose
- Cable and plug
- Variable speed controller (Trinc)
- 60 Hz execution
- 900 RPM execution
- 3-phase version

Benefits and features:
- Stackable
- Easy to transport
- Double wire-guard (option)
- Motors with integrated thermal protection
- Vertical blowing direction possible

Technical information

1~230V 50 Hz	1400 RPM	Type	I_{nom}	P_{in}	Ø hose-adapter	L_{PA}*	Throw **	Weight unpacked
	Ø mm		(A)	(W)	(mm)	dB (A)	(m)	(kg)
	400	MB4E40Q	1,10	230	430	67	45	12,5
	500	MB4E50Q	1,80	390	535	64	55	15

* Sound pressure level measured at 7 m. free blowing distance.
** Throw is the distance at which the air velocity out of the heart of the fan is still 0,5 m/s.
This is measured in an infinite room without obstacles.

Type MB 4E40Q	RPM (with 3 step controller)	Q_v (m^3/h) with grill	Q_v (m^3/h) without grill
Step 1	600	1900	2170
Step 2	900	2900	3250
Step 3 (at full speed)	1400	4500	5050
Type MB 4E50Q	**RPM (with 3 step controller)**	**Q_v (m^3/h) with grill**	**Q_v (m^3/h) without grill**
Step 1	600	3000	3300
Step 2	900	4500	5000
Step 3 (at full speed)	1400	7000	7760

Dimensions

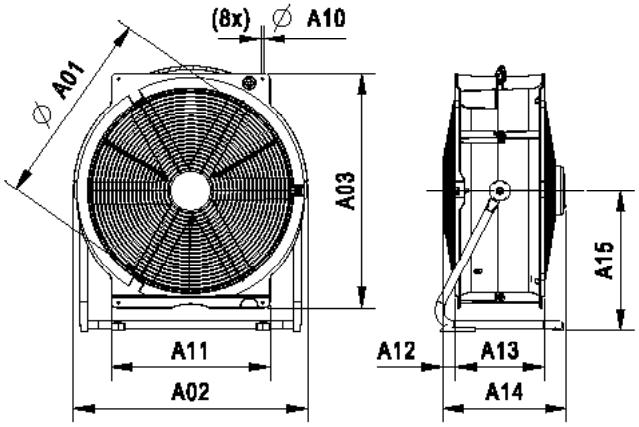

Figure 1: Standard mobile fan

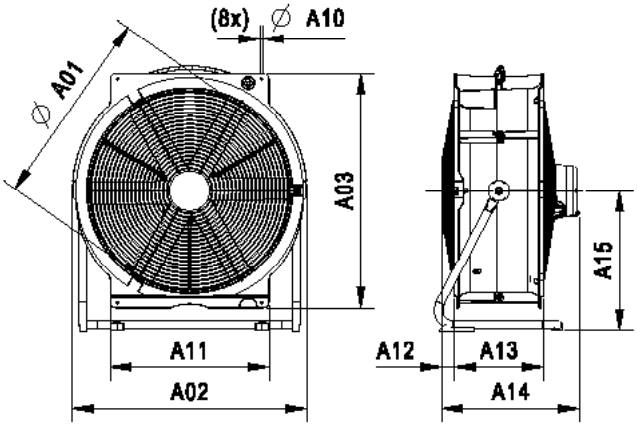

Figure 2: Mobile fan with controller

		Dimensions (mm)								
Type		A01	A02	A03	A10	A11	A12	A13	A14	A15
MB4E40Q	Figure 1	420	515	520	6,5	365	37	216	320	304
MB4E40Q with controller	Figure 2	420	515	520	6,5	365	37	216	358	304
MB4E50Q	Figure 1	518	620	620	6,5	420	33	236	327	369
MB4E50Q with controller	Figure 2	518	620	620	6,5	420	33	236	365	369

VOSTERMANS VENTILATION

Vostermans Ventilation B.V.
P.O. Box 3025
NL-5902 RA Venlo - Holland
Tel. +31 (0)77 389 32 32
Fax +31 (0)77 382 08 93
ventilation@vostermans.com
www.vostermans.com

Vostermans Ventilation Inc.
2439 S.Main St. - USA
Bloomington, IL 61704
Tel. +1 309 827 - 9798
Fax +1 309 829 - 1993
ventilation@vostermansusa.com
www.vostermansusa.com

Vostermans Ventilation S.A.R.L.
B.P. 1801
27018 Evreux Cedex
France
Tel. +33 (0)2 32 38 11 00
Fax +33 (0)2 32 33 37 12
ventilation@vostermansfrance.com
www.vostermans.com

Vostermans Ventilation Sdn. Bhd.
330, Lot, Jln Seruling 59, Kws3
Tmn Klang Jaya, 41200, Klang,
Selangor D.E., Malaysia
Tel. +60 (0)33324 3638 (HL)
Fax +60 (0)33324 1239
ventilation@vostermansasia.com
www.vostermans.com

Vostermans Ventilation B.V. develops, produces and distributes the full line of:

Multifan

All rights reserved. Vostermans Companies is not responsible for inaccurate or incomplete data. In case of questions and / or regards, please contact ventilation@vostermans.com

Subject to alterations 05/2012